MPSA60M710,MPSP60M710,MPSU60M710, MPSD60M710

FEATURES

- BV_{DSS}=600V, I_D=6A
- $R_{DS(on)}$:0.71Ω(Max)@V_{GS}=10V
- Very low FOM $R_{DS(on)} \times Q_g$
- 100% avalanche tested
- RoHS compliant

APPLICATIONS

- Switch Mode Power Supply (SMPS)
- Uninterruptible Power Supply (UPS)
- Power Factor Correction (PFC)

TO-220F

TO-220

TO-251

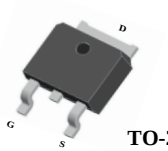
TO-252

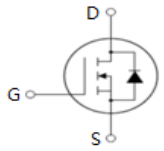

Device Marking and Package Information

Ordering code	Package	Marking
MPSA60M710	TO-220F	MP60M710
MPSP60M710	TO-220	MP60M710
MPSU60M710	TO-251	MP60M710
MPSD60M710	TO-252	MP60M710

Absolute Maximum Ratings T_C = 25ºC, unless otherwise noted

Parameter	Symbol	Value		Unit
		TO-220F	TO-220, TO-251,TO-252	
Drain-Source Voltage (V_{GS} = 0V)	V_{DSS}	600		V
Continuous Drain Current	I_D	6		A
Pulsed Drain Current (note1)	I_{DM}	12		A
Gate-Source Voltage	V_{GSS}	±30		V
Single Pulse Avalanche Energy (note2)	E_{AS}	190		mJ
AvalancheCurrent (note1)	I_{AR}	2		A
Repetitive Avalanche Energy (note1)	E_{AR}	0.2		mJ
MOSFET dv/dt ruggedness, V_{DS}=0…400 V	dv/dt	50		V/ns
Reverse diode dv/dt, V_{DS}=0…400 V, $I_{SD} \leq I_D$	dv/dt	50		V/ns
Power Dissipation (T_C = 25ºC)	P_D	25	37	W
Operating Junction and Storage Temperature Range	T_J, T_{stg}	-55~+150		ºC

Thermal Resistance

Parameter	Symbol	Value		Unit
		TO-220F	TO-220, TO-251,TO-252	
Thermal Resistance, Junction-to-Case	R_{thJC}	5	3.4	K/W
Thermal Resistance, Junction-to-Ambient	R_{thJA}	80	62	

marching-power© Copyright reserved

Specifications T_J = 25ºC, unless otherwise noted						
Parameter	**Symbol**	**Test Conditions**	**Value**			**Unit**
			Min.	**Typ.**	**Max.**	
Static						
Drain-Source Breakdown Voltage	$V_{(BR)DSS}$	V_{GS} = 0V, I_D = 250μA	600	--	--	V
Zero Gate Voltage Drain Current	I_{DSS}	V_{DS} = 600V, V_{GS} = 0V, T_J = 25ºC	--	--	1	μA
		V_{DS} = 600V, V_{GS} = 0V, T_J = 150ºC	--	--	100	
Gate-Source Leakage	I_{GSS}	V_{GS} = ±30V	--	--	±100	nA
Gate-Source Threshold Voltage	$V_{GS(th)}$	V_{DS} = V_{GS}, I_D = 0.25mA	3.0	--	4.0	V
Drain-Source On-Resistance (Note3)	$R_{DS(on)}$	V_{GS} = 10V, I_D = 3A	--	0.68	0.71	Ω
Gate Resistance	R_G	f = 1.0MHz, open drain	--	14	--	Ω
Dynamic						
Input Capacitance	C_{iss}	V_{GS} = 0V, V_{DS} = 100V, f = 1.0MHz	--	396	--	pF
Output Capacitance	C_{oss}		--	16	--	
Reverse Transfer Capacitance	C_{rss}		--	2.7	--	
Total Gate Charge	Q_g	V_{DD} = 400V, I_D = 6A, V_{GS} = 10V	--	10.4	--	nC
Gate-Source Charge	Q_{gs}		--	2	--	
Gate-Drain Charge	Q_{gd}		--	5	--	
Turn-on Delay Time	$t_{d(on)}$	V_{DD} = 400V, I_D = 6A, V_{GS} = 10V, R_G = 25Ω	--	42	--	ns
Turn-on Rise Time	t_r		--	28	--	
Turn-off Delay Time	$t_{d(off)}$		--	97	--	
Turn-off Fall Time	t_f		--	20	--	
Drain-Source Body Diode Characteristics						
Continuous Body Diode Current	I_S	T_C = 25ºC	--	--	6	A
Pulsed Diode Forward Current	I_{SM}		--	--	12	
Body Diode Voltage	V_{SD}	T_J = 25ºC, I_{SD} = 6A, V_{GS} = 0V	--	0.9	1.2	V
Reverse Recovery Time	t_{rr}	V_R = 400V, I_F = 6A, di_F/dt = 100A/μs	--	320	--	ns
Reverse Recovery Charge	Q_{rr}		--	2.2	--	μC
Peak Reverse Recovery Current	I_{rrm}		--	15	--	A

Notes

1. Repetitive Rating: Pulse width limited by maximum junction temperature
2. I_{AS} = 2A, V_{DD} = 50V, R_G = 25Ω, Starting T_J = 25°C
3. Pulse Test: Pulse width ≤ 300μs, Duty Cycle ≤ 1%

Typical Characteristics T_J = 25ºC, unless otherwise noted

Figure 1. Output Characteristics(T_J=25℃)

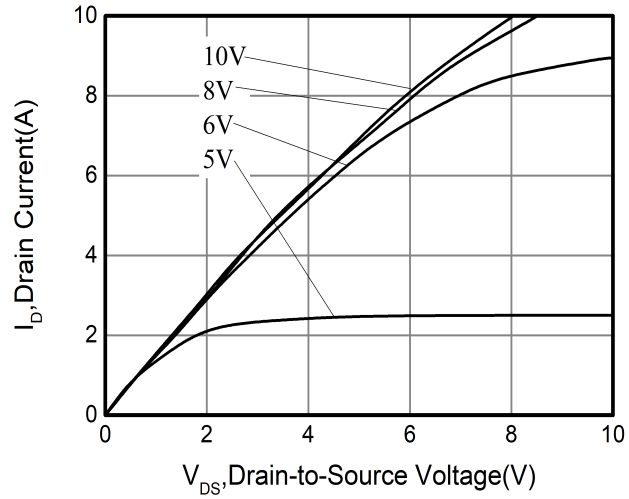

Figure 2. Transfer Characteristics

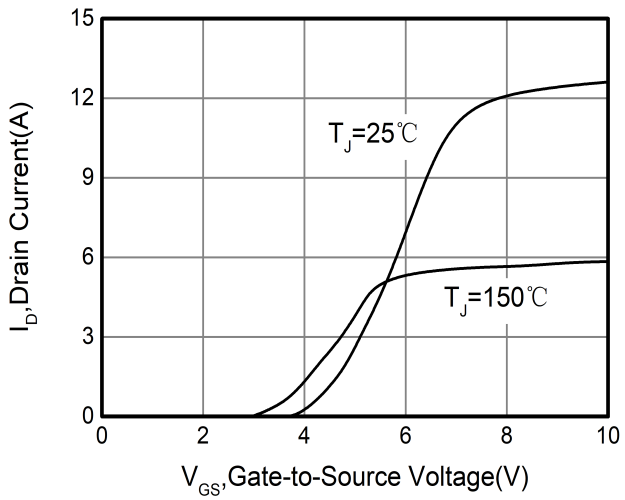

Figure 3. On-Resistance vs Drain Current

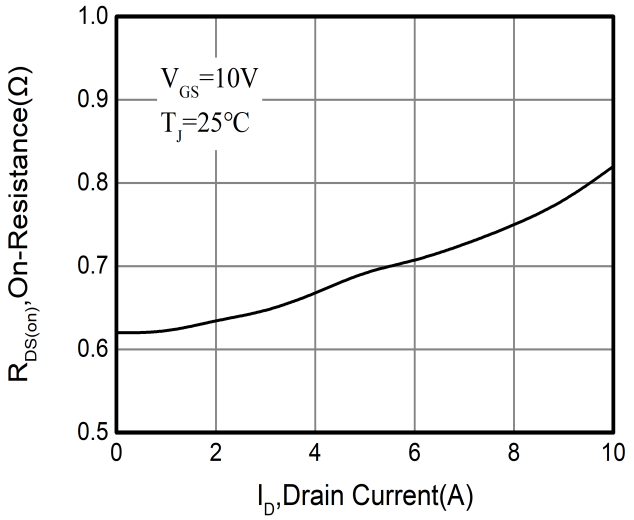

Figure 4. Capacitance

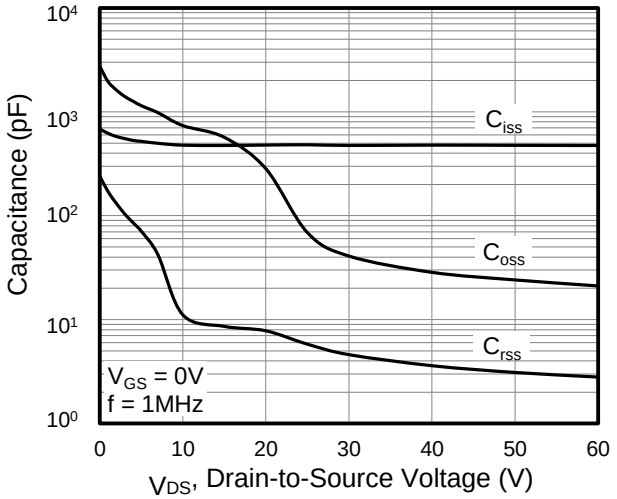

Figure 5. Gate Charge

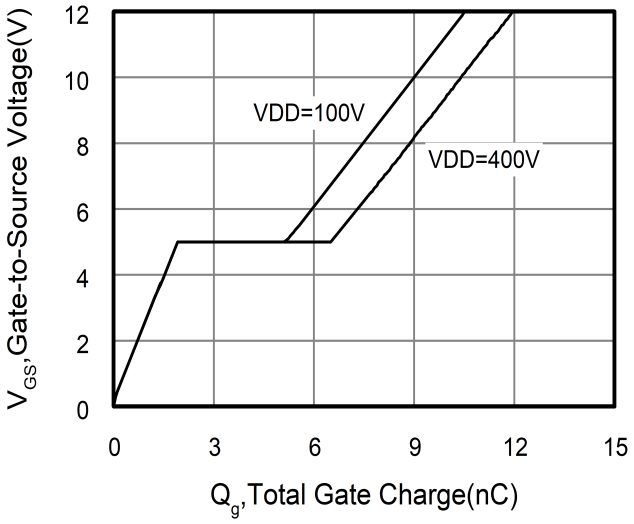

Figure 6. Body Diode Forward Voltage

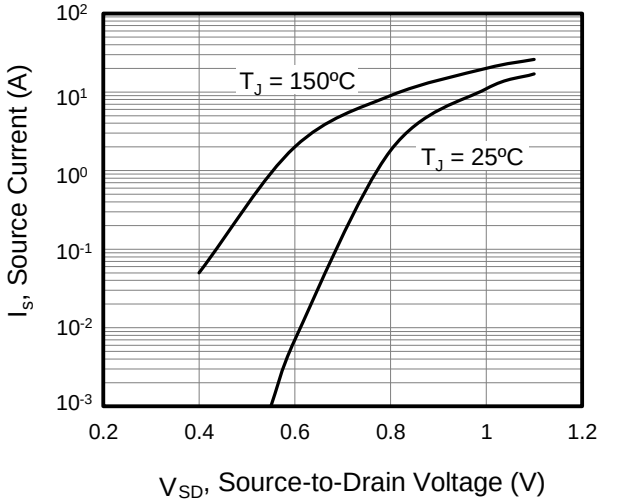

Typical Characteristics T_J = 25ºC, unless otherwise noted

Figure 7. On-Resistance vs. Junction Temperature

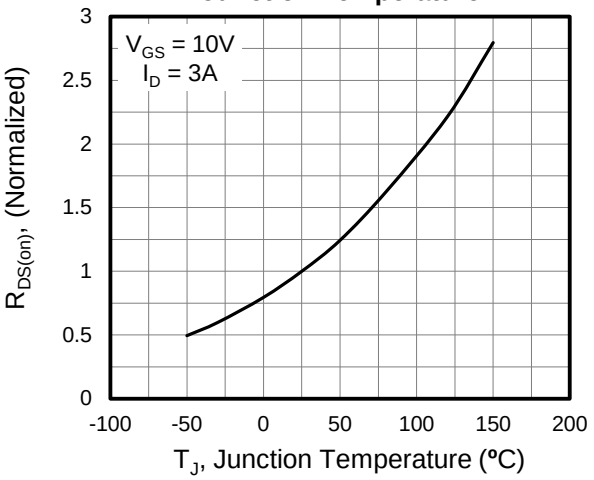

Figure 8. Threshold Voltage vs. Junction Temperature

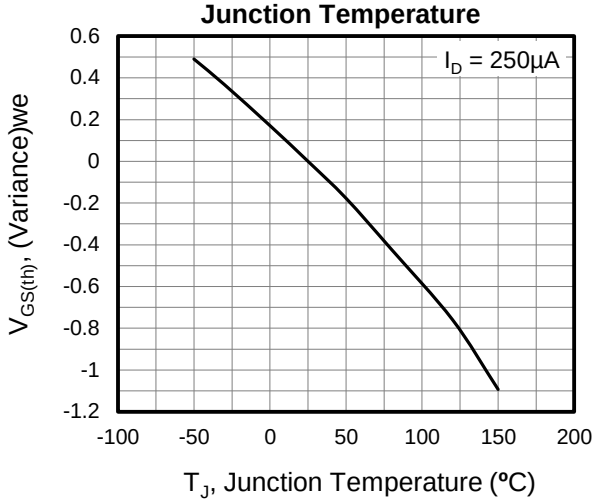

Figure 9. Transient Thermal Impedance TO-220,TO-251,TO-252

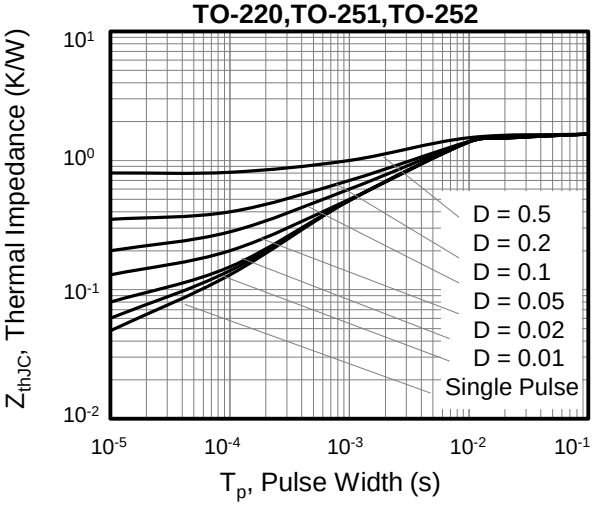

Figure 10. Transient Thermal Impedance TO-220F

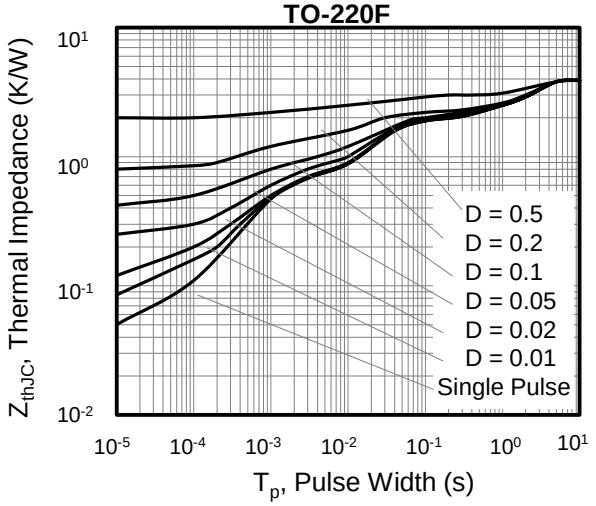

Figure A：Gate Charge Test Circuit and Waveform

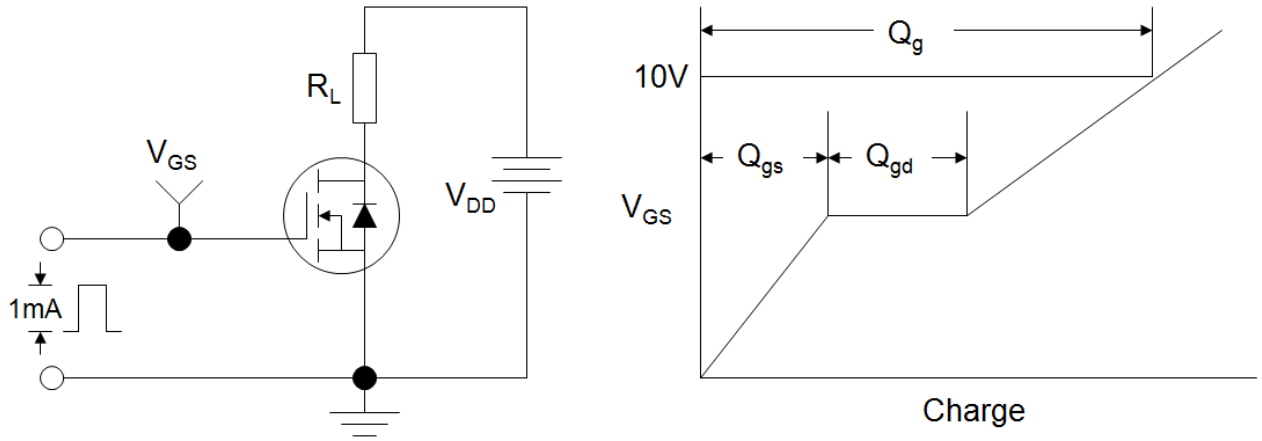

Figure B：Resistive Switching Test Circuit and Waveform

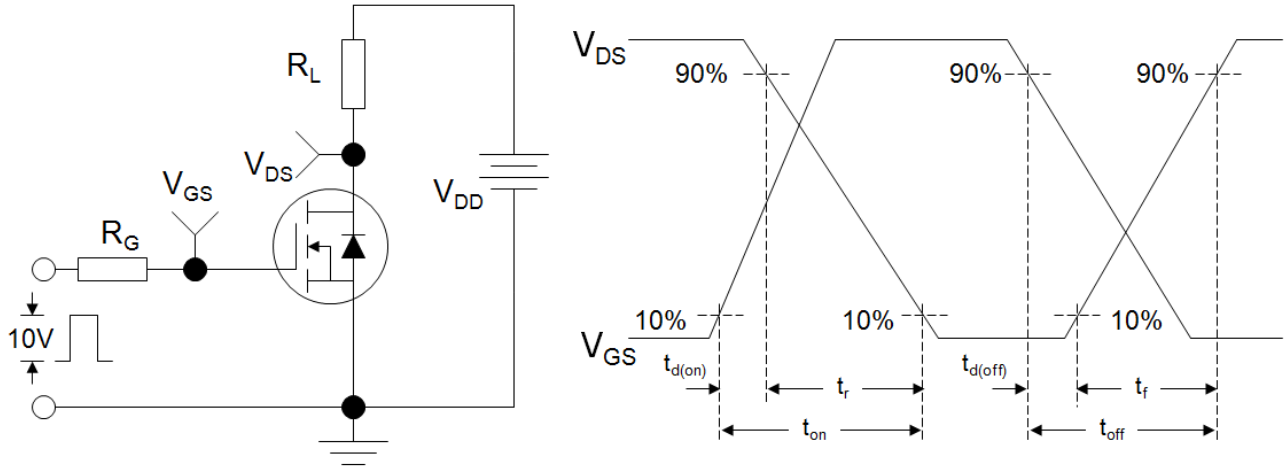

Figure C：Unclamped Inductive Switching Test Circuit and Waveform

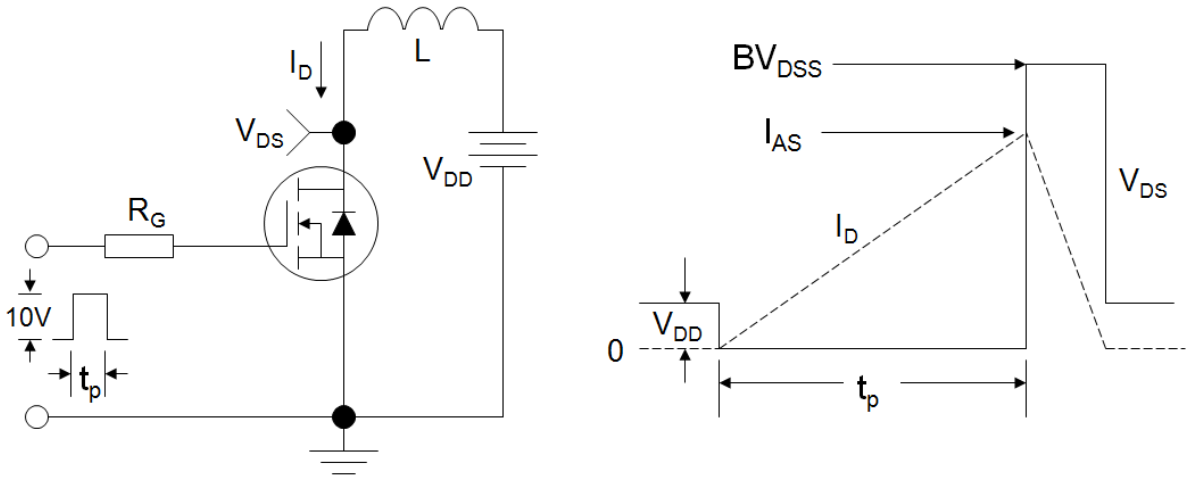

TO-220F

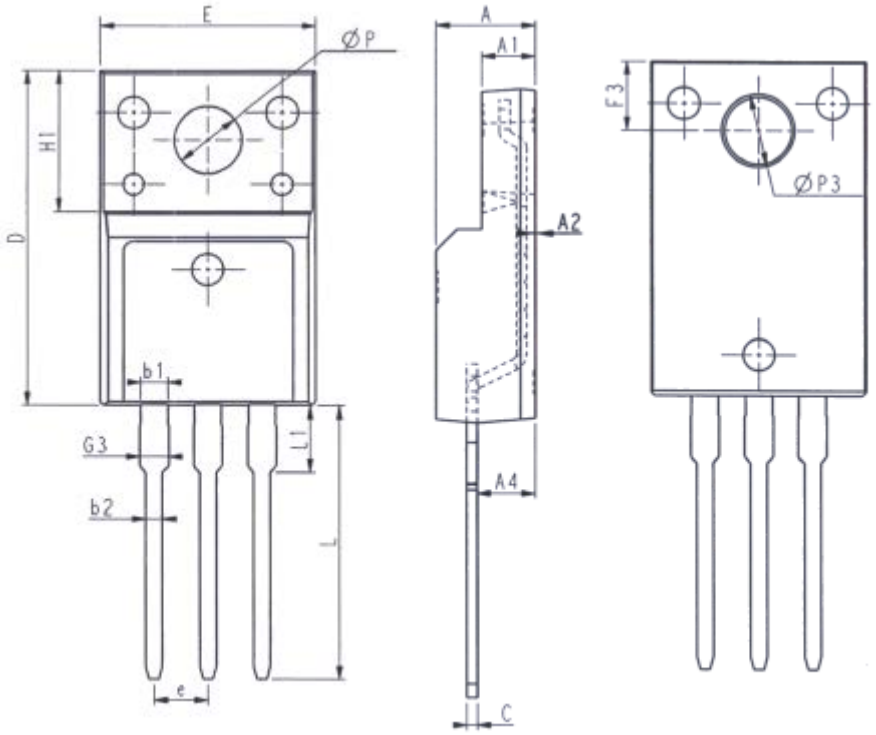

Unit: mm		
Symbol	Min.	Max.
E	9.96	10.36
A	4.50	4.90
A1	2.34	2.74
A2	0.30	0.60
A4	2.56	2.96
c	0.40	0.65
D	15.57	16.17
H1	6.70REF	
e	2.54BSC	

Unit: mm		
Symbol	Min.	Max.
L	12.68	13.28
L1	2.93	3.13
P	3.03	3.38
P3	3.15	3.65
F3	3.15	3.45
G3	1.25	1.55
b1	1.18	1.43
b2	0.70	0.95

TO-220

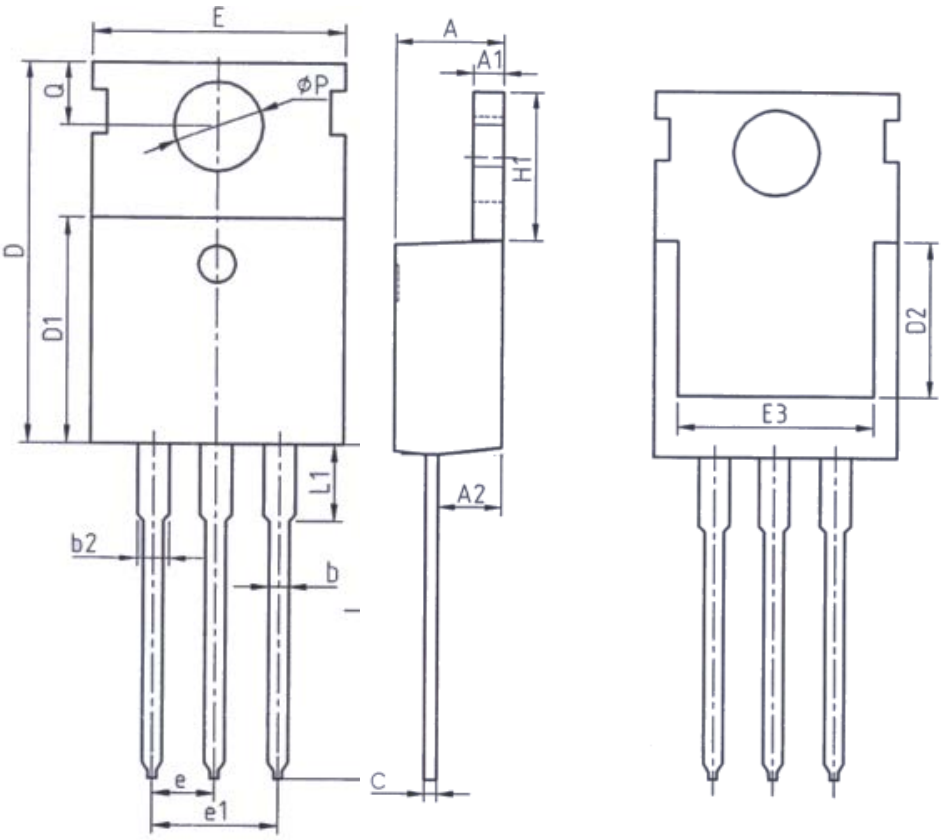

Unit: mm		
Symbol	Min.	Max.
A	4.37	4.77
A1	1.25	1.45
A2	2.20	2.60
b	0.70	0.95
b2	1.17	1.47
c	0.40	0.65
D	15.10	16.10
D1	8.80	9.40
D2	5.50	–

Unit: mm		
Symbol	Min.	Max.
E	9.70	10.30
E3	7.00	–
e	2.54BSC	
e1	5.08BSC	
H1	6.25	6.85
L	12.75	13.80
L1	–	3.40
P	3.40	3.80
Q	2.60	3.00

TO-251

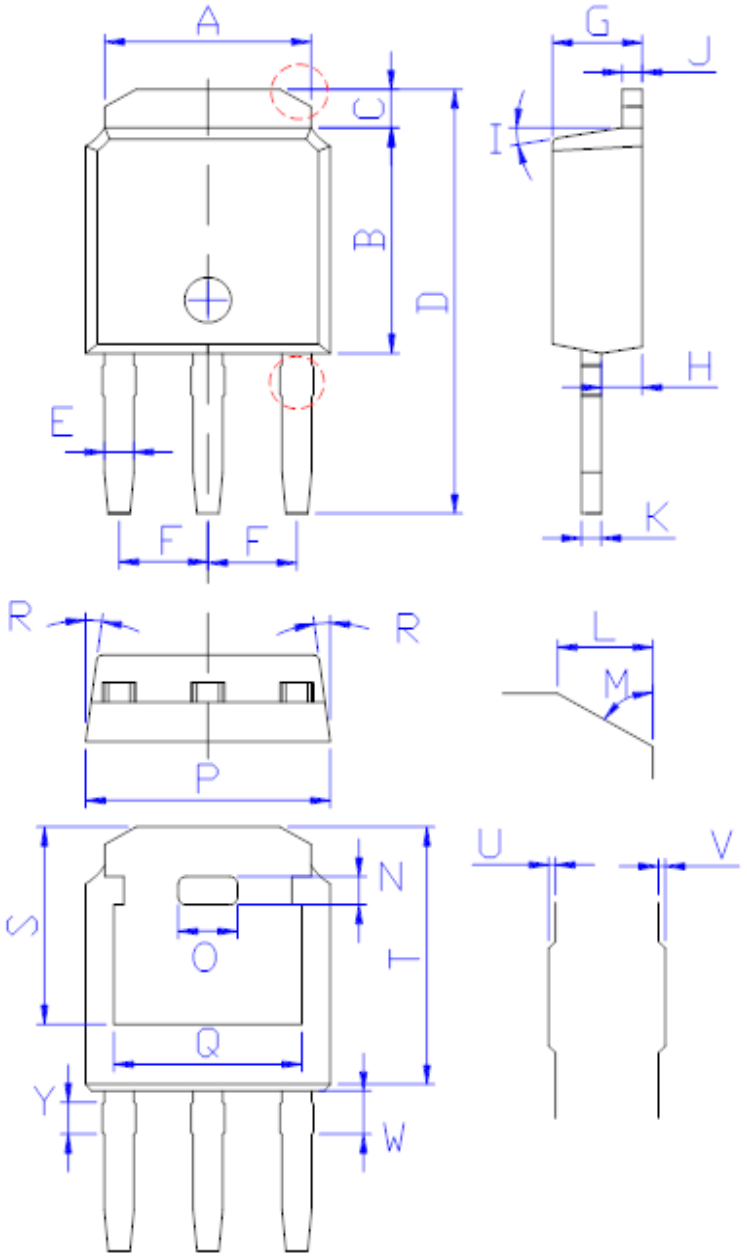

DIM	MILLIMETERS
A	5.34±0.30
B	6.00±0.30
C	1.05±0.30
D	11.31±0.30
E	0.76±0.15
F	2.28±0.15
G	2.30±0.30
H	1.06±0.30
I	(4-10)°
J	0.51±0.15
K	0.52±0.15
L	0.80±0.30
M	60°
N	0.75±0.30
O	1.80±0.30
P	6.60±0.30
Q	4.85±0.30
R	(4-8.5)°
S	5.30±0.30
T	6.90±0.30
U	0.05±0.05
V	0.05±0.05
W	1.15±0.25
Y	0.85±0.25

（单位：mm）

TO-252

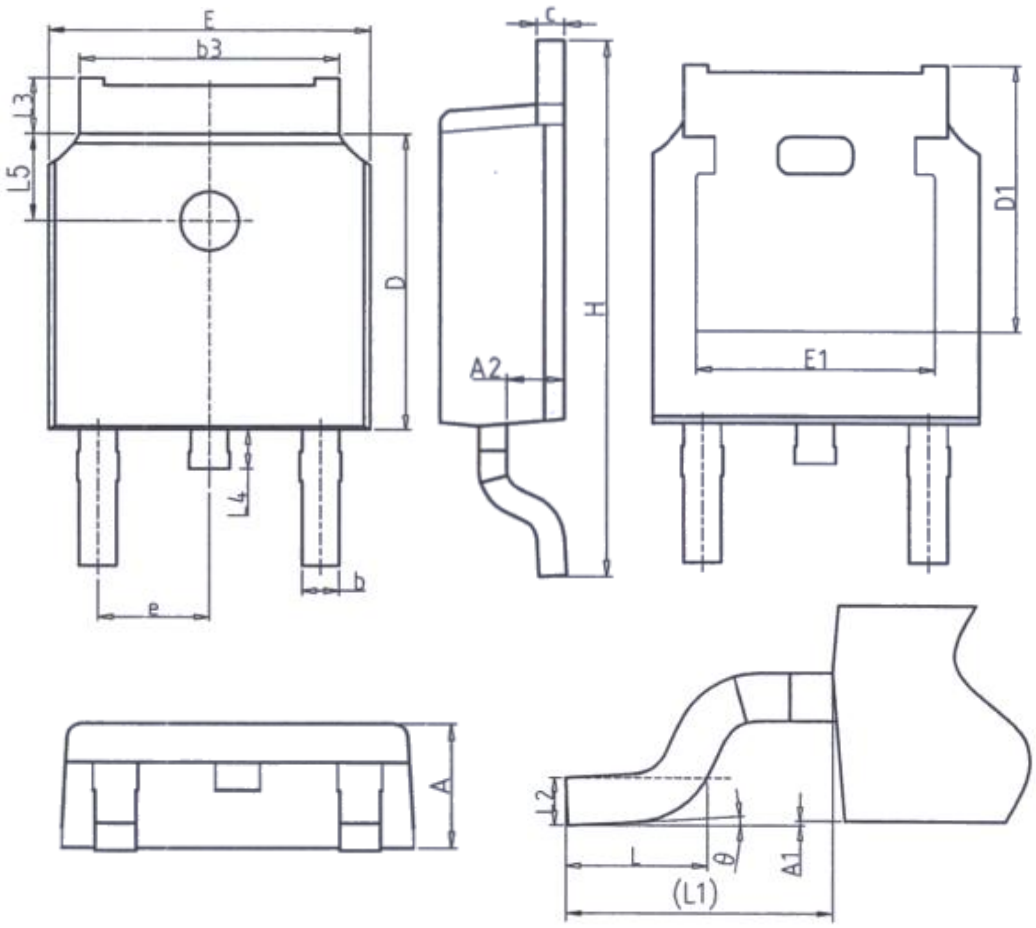

Unit: mm		
Symbol	Min.	Max.
A	2.20	2.40
A1	0.00	0.20
A2	0.97	1.17
b	0.68	0.90
b3	5.20	5.50
c	0.43	0.63
D	5.98	6.22
D1	5.30REF	
E	6.40	6.80
E1	4.63	–

Unit: mm		
Symbol	Min.	Max.
e	2.286BSC	
H	9.40	10.50
L	1.38	1.75
L1	2.90REF	
L2	0.51BSC	
L3	0.88	1.28
L4	–	1.00
L5	1.65	1.95
θ	0°	8°