MPVP8N60

Power MOSFET

SWITCHING REGULATOR APPLICATIONS

Features

- High Voltage : BV_{DSS}=600V(Min.)
- Low C_{rss} : C_{rss}=13.7pF(Typ.)
- Low gate charge : Qg=20nC(Typ.)
- Low $R_{DS(on)}$: $R_{DS(on)}$=1.2Ω(Max.)

PIN Connection

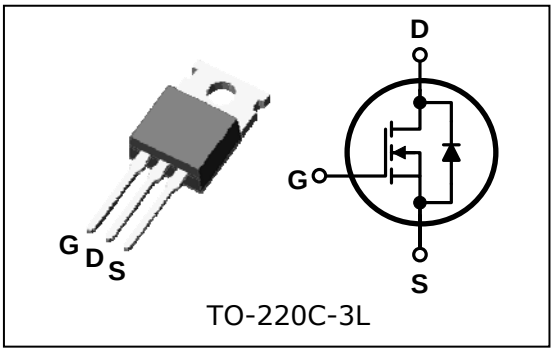

TO-220C-3L

Ordering Information

Type No.	Marking	Package Code
MPVP8N60	MPVP8N60	TO-220C-3L

Outline Dimensions

unit : mm

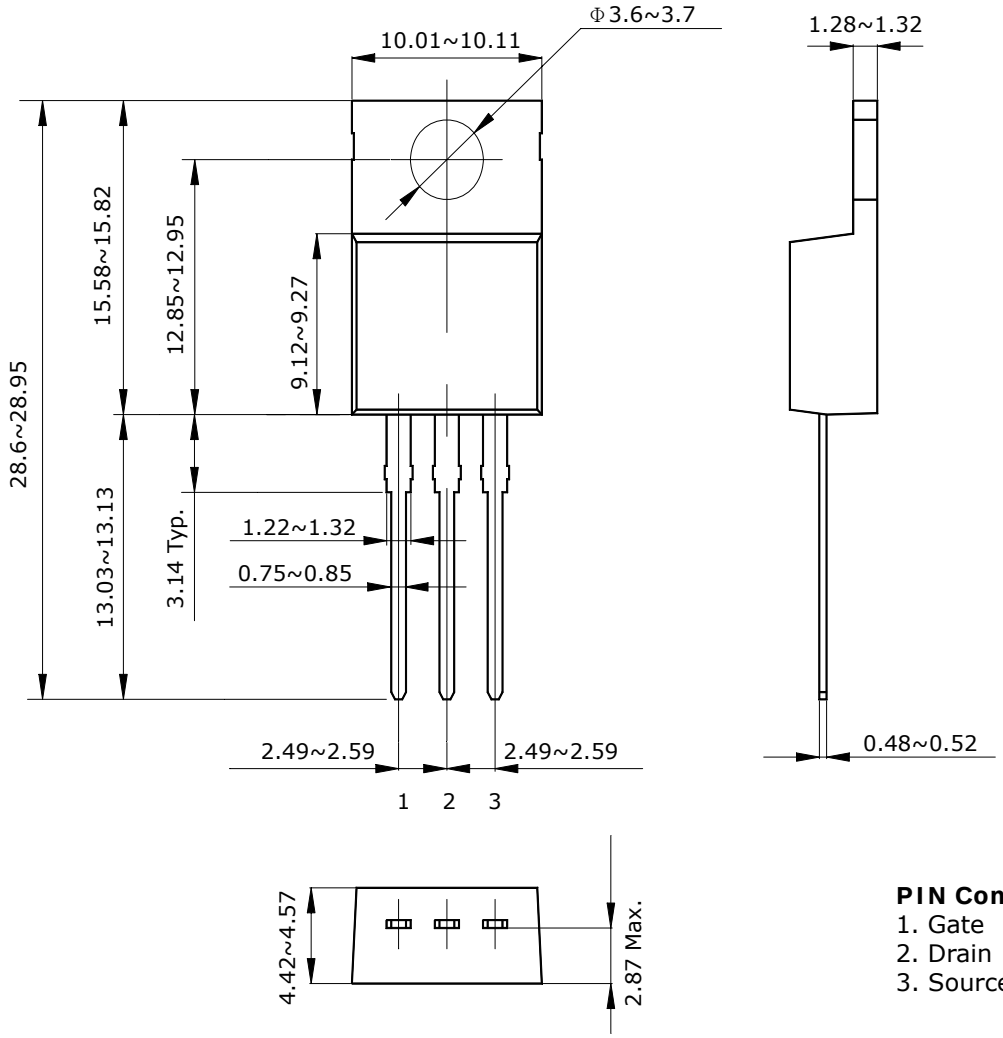

PIN Connections
1. Gate
2. Drain
3. Source

Absolute maximum ratings (T_C=25°C unless otherwise noted)

Characteristic	Symbol		Rating	Unit
Drain-source voltage	V_{DSS}		600	V
Gate-source voltage	V_{GSS}		±30	V
Drain current (DC) *	I_D	T_C=25°C	8.0	A
		T_C=100°C	4.8	A
Drain current (Pulsed) *	I_{DM}		32	A
Power dissipation	P_D		147	W
Avalanche current (Single) ②	I_{AS}		8	A
Single pulsed avalanche energy ②	E_{AS}		266	mJ
Avalanche current (Repetitive) ①	I_{AR}		8	A
Repetitive avalanche energy ①	E_{AR}		14.7	mJ
Junction temperature	T_J		150	°C
Storage temperature range	T_{stg}		-55~150	

* Limited by maximum junction temperature

Characteristic		Symbol	Typ.	Max.	Unit
Thermal resistance	Junction-case	$R_{th(J-C)}$	-	0.85	°C/W
	Junction-ambient	$R_{th(J-A)}$	-	62.5	

Electrical Characteristics (T_C=25°C unless otherwise noted)

Characteristic	Symbol	Test Condition	Min.	Typ.	Max.	Unit
Drain-source breakdown voltage	BV_{DSS}	I_D=250uA, V_{GS}=0V	600	-	-	V
Gate threshold voltage	$V_{GS(th)}$	I_D=250uA, V_{DS}=V_{GS}	2.0	-	4.0	V
Drain-source cut-off current	I_{DSS}	V_{DS}=600V, V_{GS}=0V	-	-	10	uA
Gate leakage current	I_{GSS}	V_{DS}=0V, V_{GS}=±30V	-	-	±100	nA
Drain-source on-resistance ④	$R_{DS(on)}$	V_{GS}=10V, I_D=4.0A	-	-	1.2	Ω
Forward transfer conductance ④	g_{fs}	V_{DS}=10V, I_D=4.0A	-	11	-	S
Input capacitance	C_{iss}	V_{GS}=0V, V_{DS}=25V f=1 MHz	-	1006	1507	pF
Output capacitance	C_{oss}		-	148	185	
Reverse transfer capacitance	C_{rss}		-	13.7	17.1	
Turn-on delay time	$t_{d(on)}$	V_{DD}=300V, I_D=8A R_G=25Ω ③④	-	23	-	ns
Rise time	t_r		-	69	-	
Turn-off delay time	$t_{d(off)}$		-	144	-	
Fall time	t_f		-	77	-	
Total gate charge	Q_g	V_{DS}=560V, V_{GS}=10V I_D=8A ③④	-	20	-	nC
Gate-source charge	Q_{gs}		-	4	-	
Gate-drain charge	Q_{gd}		-	7.2	-	

Source-Drain Diode Ratings and Characteristics (T_C=25°C unless otherwise noted)

Characteristic	Symbol	Test Condition	Min.	Typ.	Max.	Unit
Source current (DC)	I_S	Integral reverse diode in the MOSFET	-	-	8	A
Source current (Pulsed) ①	I_{SM}		-	-	32	
Forward voltage ④	V_{SD}	V_{GS}=0V, I_S=8A	-	-	1.4	V
Reverse recovery time	t_{rr}	I_S=8A, V_{GS}=0V dI_F/dt=100A/us	-	420	-	ns
Reverse recovery charge	Q_{rr}		-	4.1	-	uC

Note ;

① Repetitive rating : Pulse width limited by maximum junction temperature

② L=7.74mH, I_{AS}=8A, V_{DD}=50V, R_G=25Ω, Starting T_J=25°C

③ Pulse Test : Pulse width≤300us, Duty cycle≤2%

④ Essentially independent of operating temperature

Electrical Characteristic Curves

Fig. 1 I_D - V_{DS}

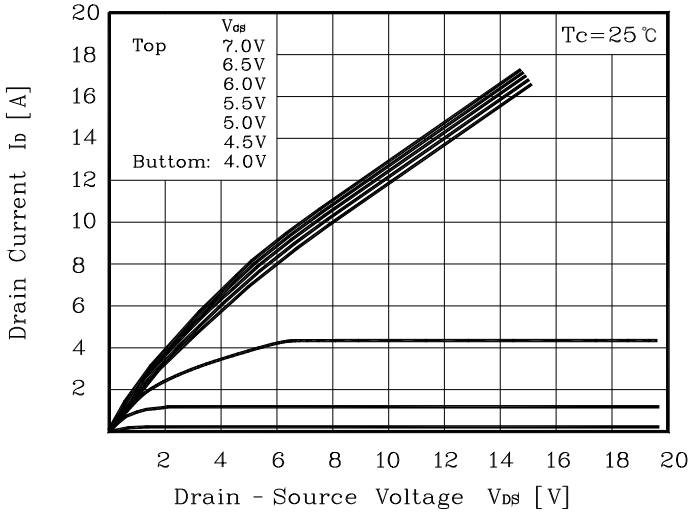

Fig. 2 I_D - V_{GS}

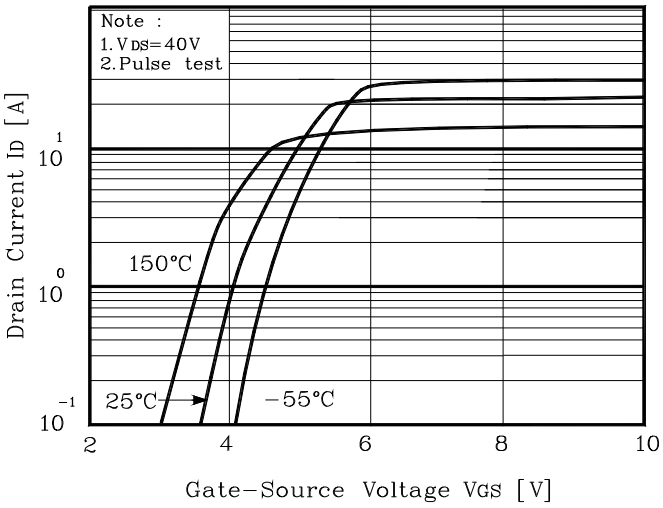

Fig. 3 $R_{DS(on)}$ - I_D

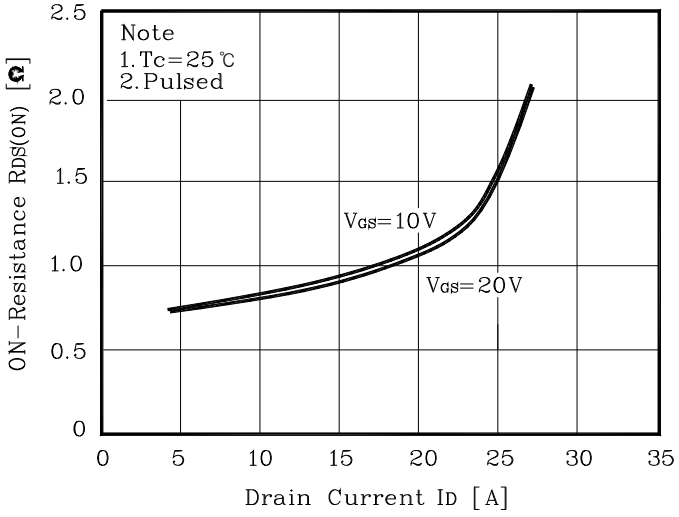

Fig. 4 I_S - V_{SD}

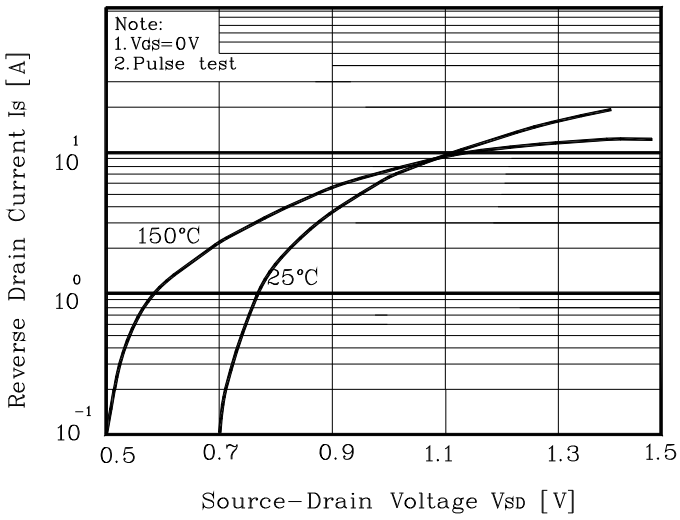

Fig. 5 Capacitance - V_{DS}

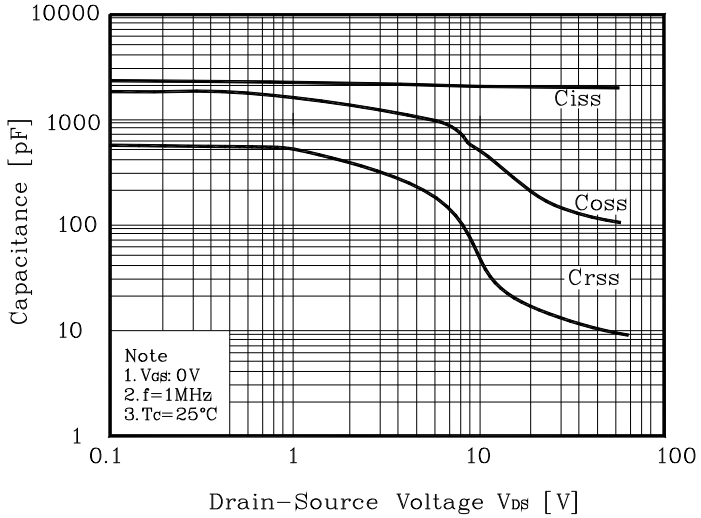

Fig.6 V_{GS} - Q_G

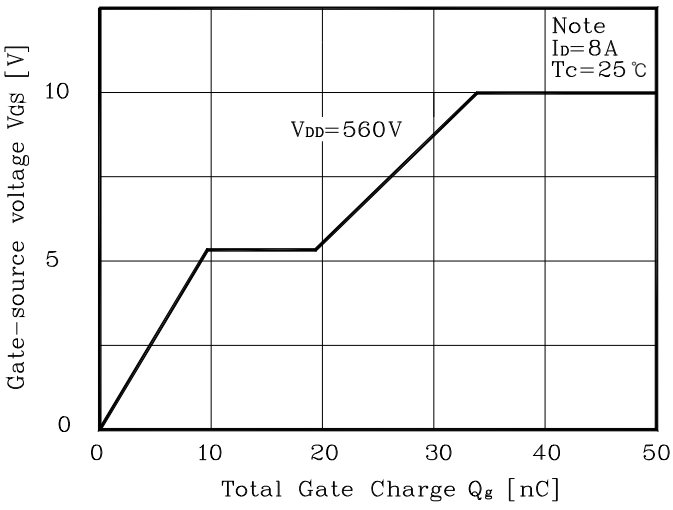

Electrical Characteristic Curves

Fig. 7 V_{DSS} - T_J

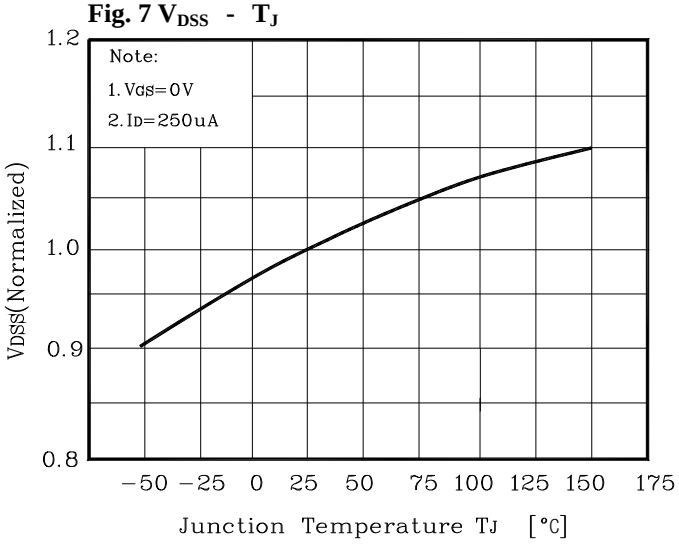

Fig.8 $R_{DS(on)}$ - T_J

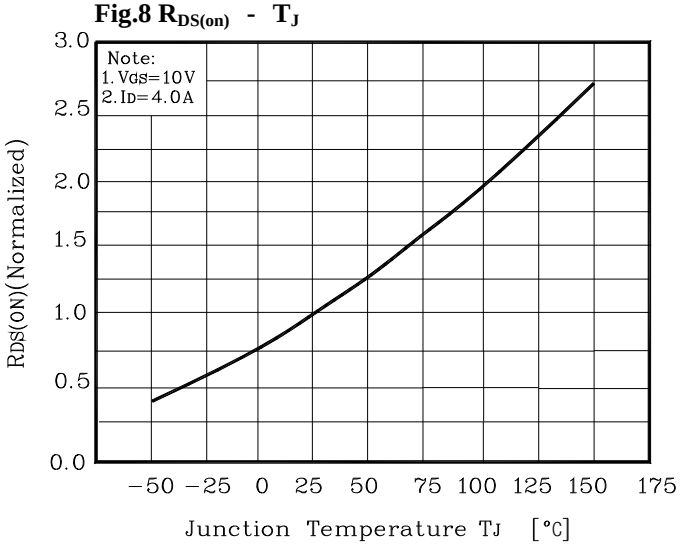

Fig. 9 I_D - T_C

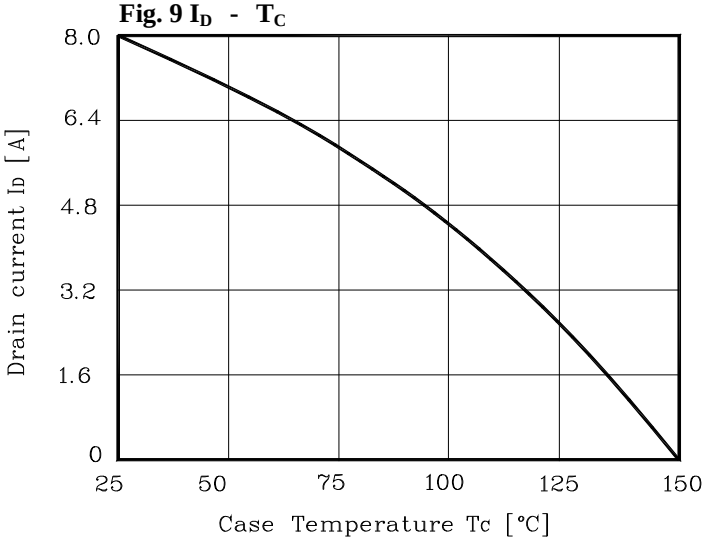

Fig. 10 Safe Operating Area

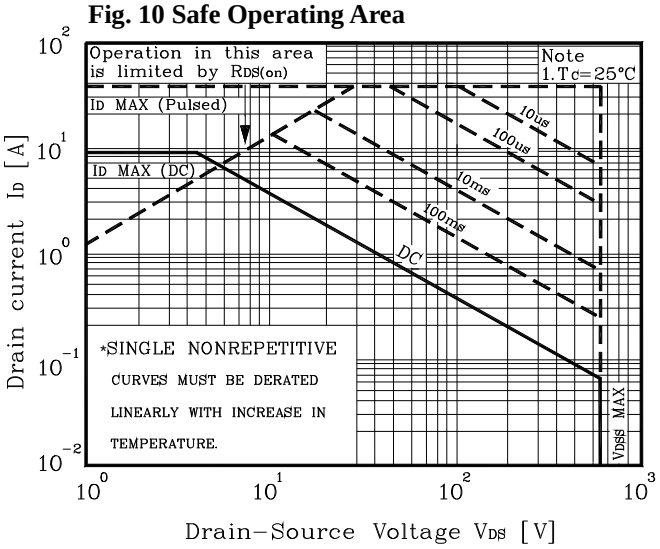

Fig. 11 Gate Charge Test Circuit & Waveform

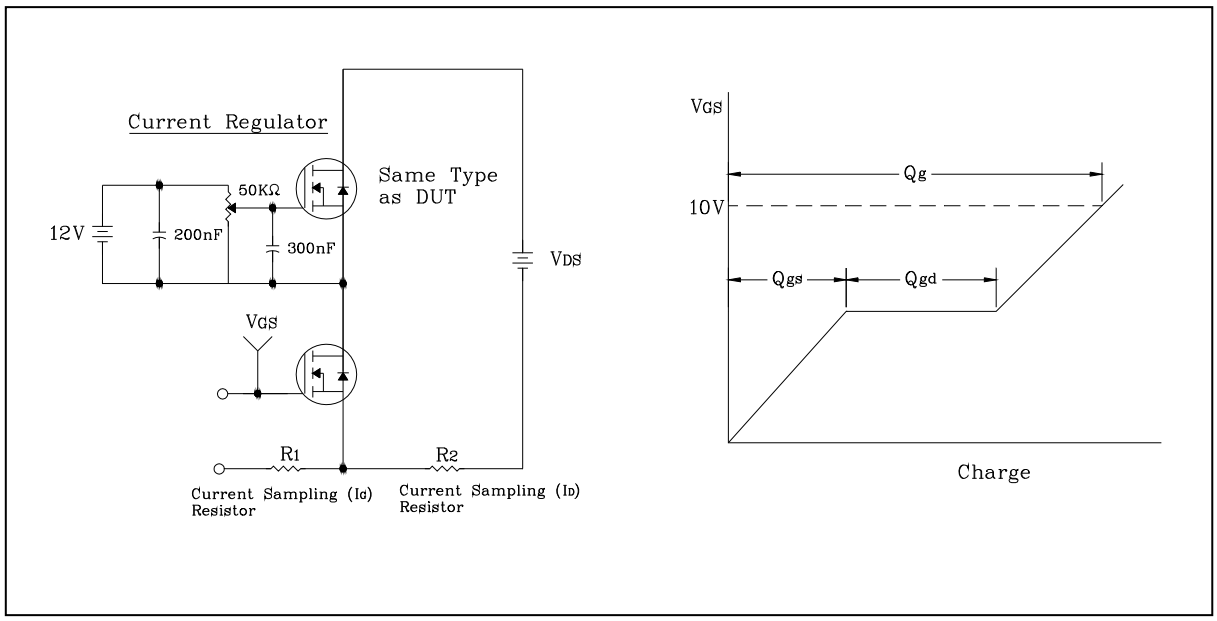

Fig. 12 Resistive Switching Test Circuit & Waveform

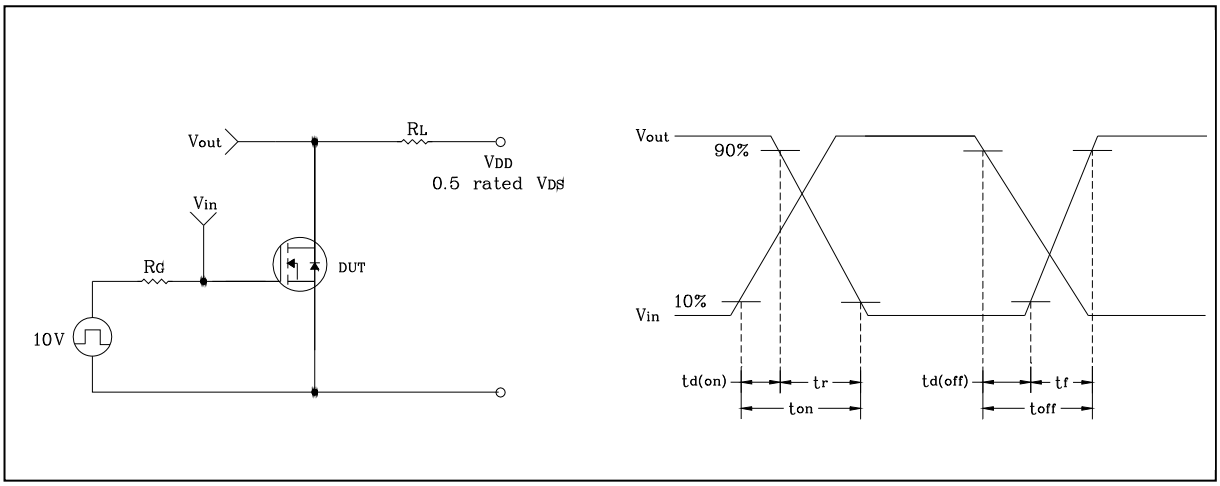

Fig. 13 E_{AS} Test Circuit & Waveform

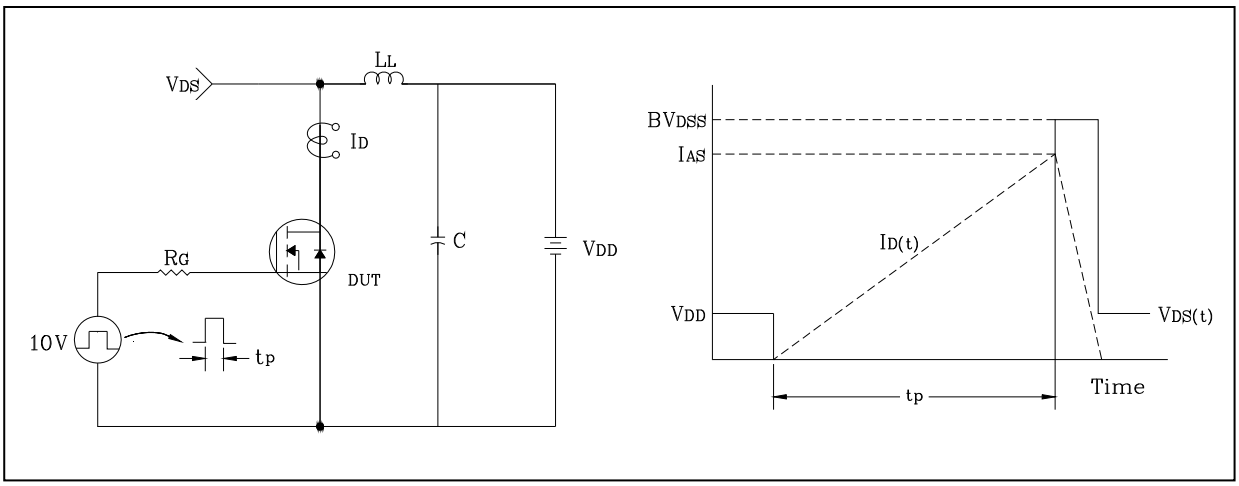
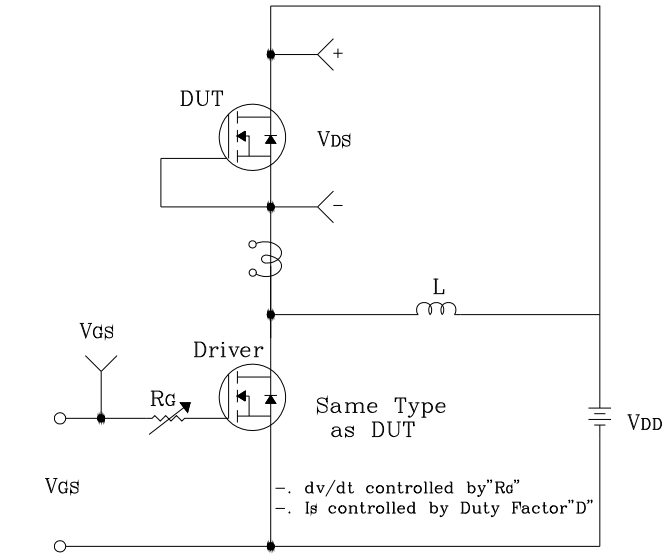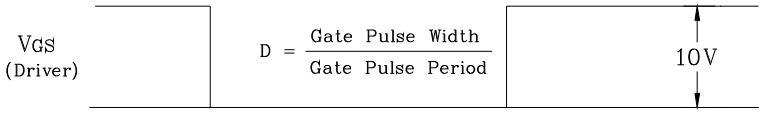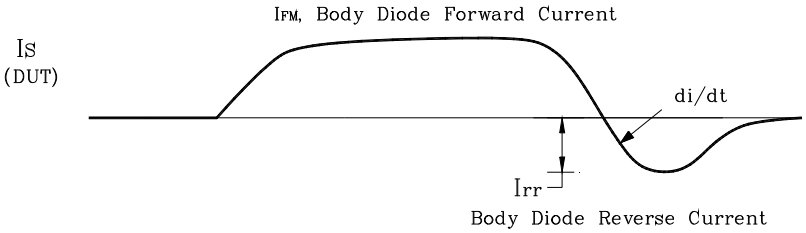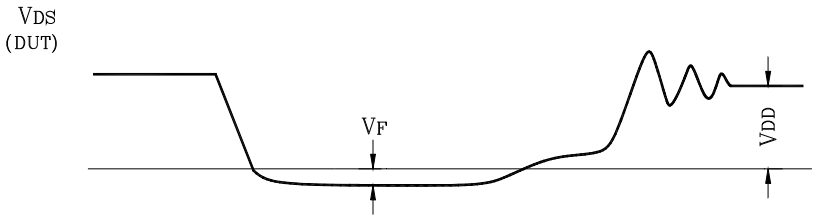
Fig. 14 Diode Reverse Recovery Time Test Circuit & Waveform