MPVX2N60B Series
Power MOSFET

FEATURES

- BV_{DSS}: 600V, I_D=2A
- $R_{DS(on)}$: 3.5Ω(Max) @V_{GS}=10V
- Very Low FOM ($R_{DS(on)}$ *Q_g)
- Excellent stability and uniformity

APPLICATIONS

- Switch Mode Power Supply (SMPS)
- Uninterruptible Power Supply (UPS)
- Power Factor Correction (PFC)
- AC to DC Converters

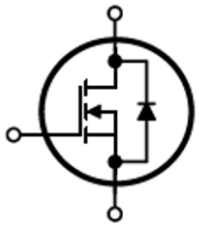

Ordering Information

Type NO.	Marking	Package Code
MPVA2N60B	MPVA2N60B	TO-220F
MPVP2N60B	MPVP2N60B	TO-220
MPVU2N60B	MPVU2N60B	TO-251
MPVD2N60B	MPVD2N60B	TO-252
MPVT2N60B	MPVT2N60B	TO-126

Absolute Maximum Ratings T_C = 25ºC, unless otherwise noted

Parameter		Symbol	Value		Unit
			220F	220-251-252-126	
Drain-Source Voltage (V_{GS} = 0V)		V_{DSS}	600		V
Continuous Drain Current		I_D	2		A
Pulsed Drain Current	(note1)	I_{DM}	8		A
Gate-Source Voltage		V_{GSS}	±30		V
Single Pulse Avalanche Energy	(note2)	E_{AS}	95		mJ
Avalanche Current	(note1)	I_{AR}	2		A
Repetitive Avalanche Energy	(note1)	E_{AR}	6.4		mJ
Power Dissipation (T_C = 25ºC)		P_D	20	25	W
Operating Junction and Storage Temperature Range		T_J, T_{stg}	-55~+150		ºC

Thermal Resistance

Parameter	Symbol	Value		Unit
		220F	220-251-252-126	
Thermal Resistance, Junction-to-Case	R_{thJC}	6.25	5	ºC/W
Thermal Resistance, Junction-to-Ambient	R_{thJA}	62.5	60.0	

marching-power© Copyright reserved

Specifications T_J = 25ºC, unless otherwise noted						
Parameter	**Symbol**	**Test Conditions**	**Value**			**Unit**
			Min.	**Typ.**	**Max.**	
Static						
Drain-Source Breakdown Voltage	$V_{(BR)DSS}$	V_{GS} = 0V, I_D = 250μA	600	--	--	V
Zero Gate Voltage Drain Current	I_{DSS}	V_{DS} = 600V, V_{GS} = 0V, T_J = 25ºC	--	--	1	μA
Gate-Source Leakage	I_{GSS}	V_{GS} = ±30V	--	--	±100	nA
Gate-Source Threshold Voltage	$V_{GS(th)}$	V_{DS} = V_{GS}, I_D = 250μA	2.0	--	4.0	V
Drain-Source On-Resistance (Note4)	$R_{DS(on)}$	V_{GS} = 10V, I_D = 1.0A	--	3.0	3.5	Ω
Dynamic						
Input Capacitance	C_{iss}	V_{GS} = 0V, V_{DS} = 25V, f = 1.0MHz	--	267	--	pF
Output Capacitance	C_{oss}		--	26	--	
Reverse Transfer Capacitance	C_{rss}		--	5	--	
Total Gate Charge	Q_g	V_{DD} = 400V, I_D = 2.0A, V_{GS} = 10V	--	6.3	--	nC
Gate-Source Charge	Q_{gs}		--	1.2	--	
Gate-Drain Charge	Q_{gd}		--	2.9	--	
Turn-on Delay Time	$t_{d(on)}$	V_{DD} =300V, I_D = 2.0A, R_G = 25Ω	--	7.8	--	ns
Turn-on Rise Time	t_r		--	33	--	
Turn-off Delay Time	$t_{d(off)}$		--	23	--	
Turn-off Fall Time	t_f		--	59	--	
Drain-Source Body Diode Characteristics						
Continuous Body Diode Current	I_S	T_C = 25ºC	--	--	2	A
Pulsed Diode Forward Current	I_{SM}		--	--	8	
Body Diode Voltage	V_{SD}	T_J = 25ºC, I_{SD} = 2.0A, V_{GS} = 0V	--	--	1.4	V
Reverse Recovery Time	t_{rr}	V_{GS} = 0V, I_F = 2.0A, di_F/dt = 100A/μs	--	80	--	ns
Reverse Recovery Charge	Q_{rr}		--	1.8	--	μC

Notes

1. Repetitive Rating: Pulse width limited by maximum junction temperature
2. I_{AS} = 2A, V_{DD} = 50V, R_G = 25Ω, Starting T_J = 25°C
3. Pulse Test: Pulse width ≤ 300μs, Duty Cycle ≤ 1%
4. Essentially independent of operating temperature

Typical Characteristics T_J = 25ºC, unless otherwise noted

Figure 1. Output Characteristics

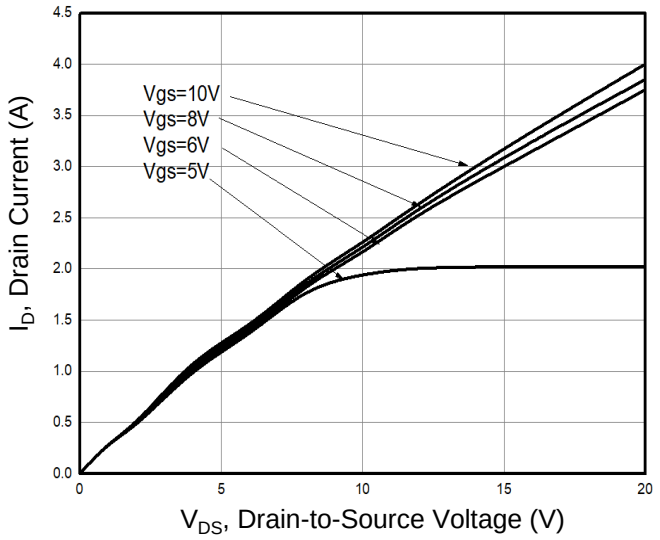

Figure 2. Transfer Characteristics

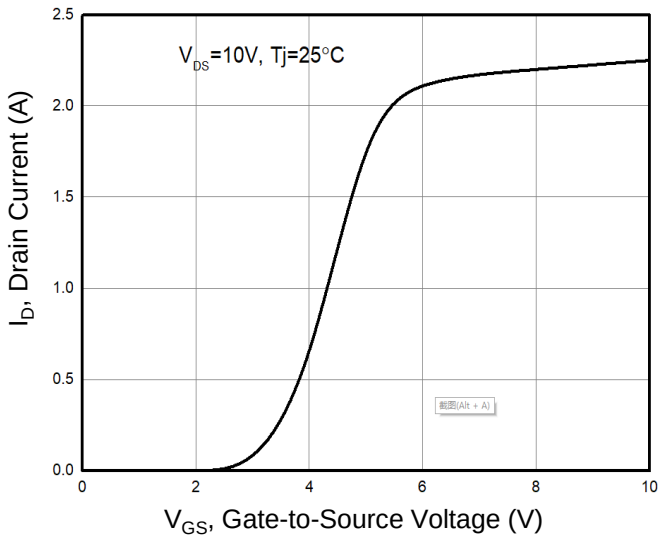

Figure 3. Drain Current vs. Temperature

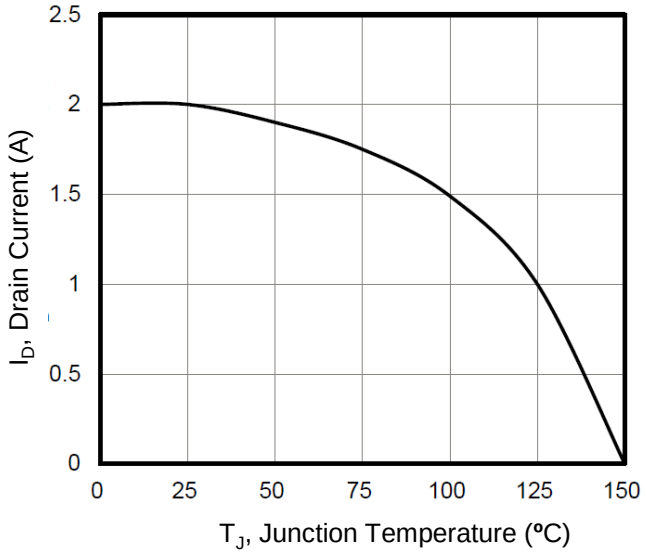

Figure 4. Capacitance

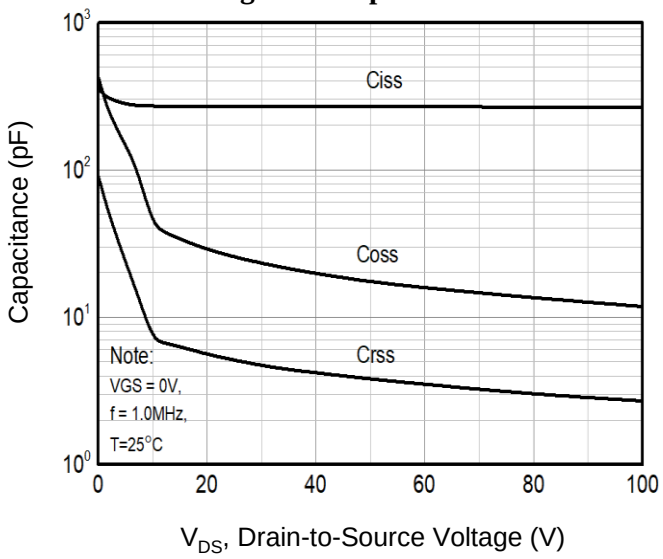

Figure 5. Gate Charge

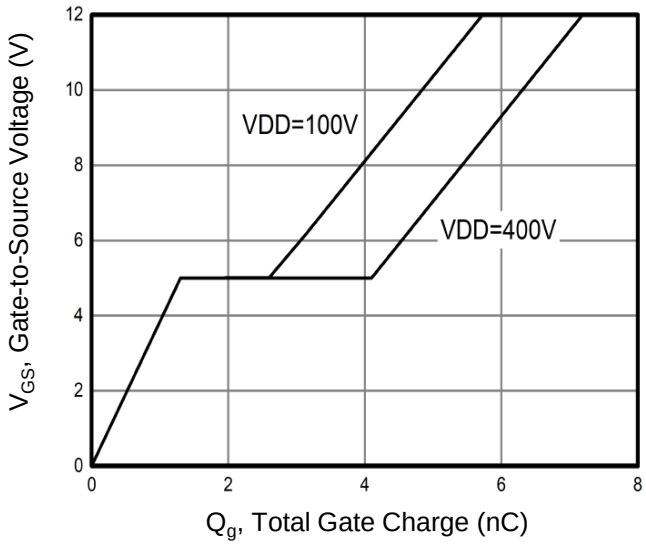

Figure 6. Body Diode Forward Voltage

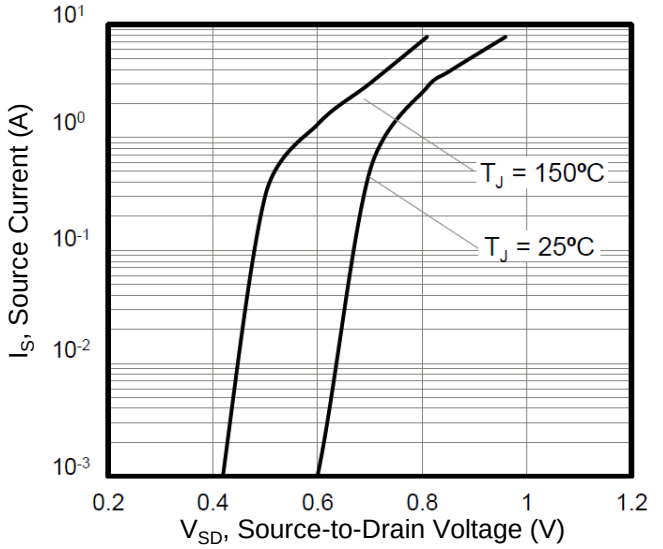

Typical Characteristics T_J = 25ºC, unless otherwise noted

Figure 7. On-Resistance vs. Temperature

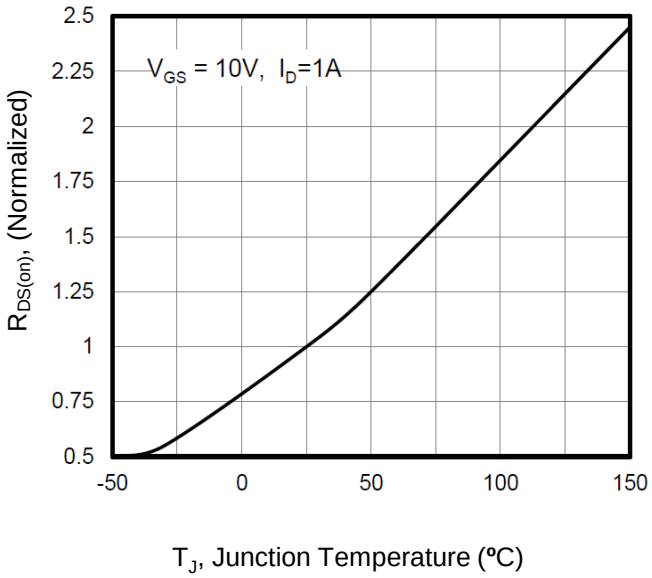

Figure 8. Transient Thermal Impedance (TO-220F)

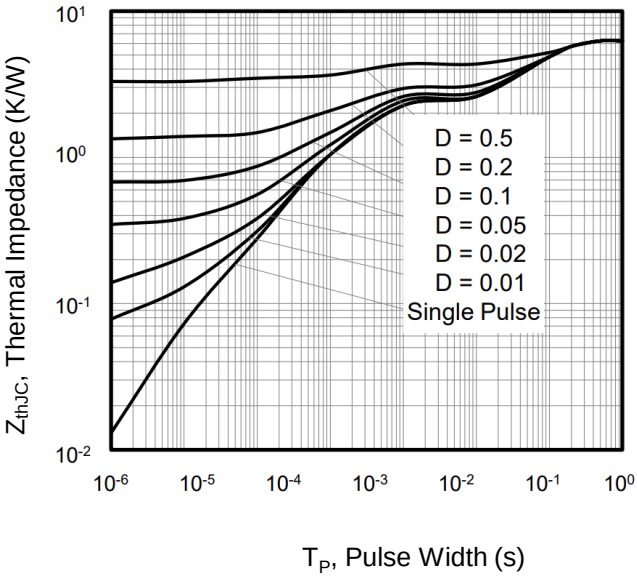

Figure 9. Transient Thermal Impedance

(TO-220 TO-251 TO-252 TO-126)

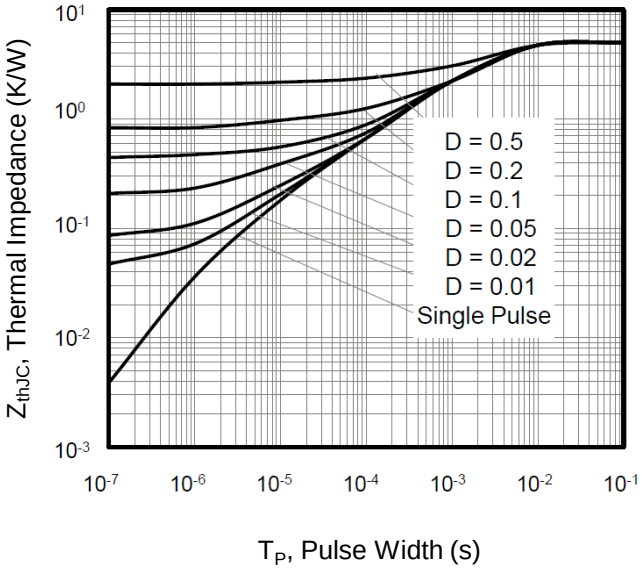

Figure A：Gate Charge Test Circuit and Waveform

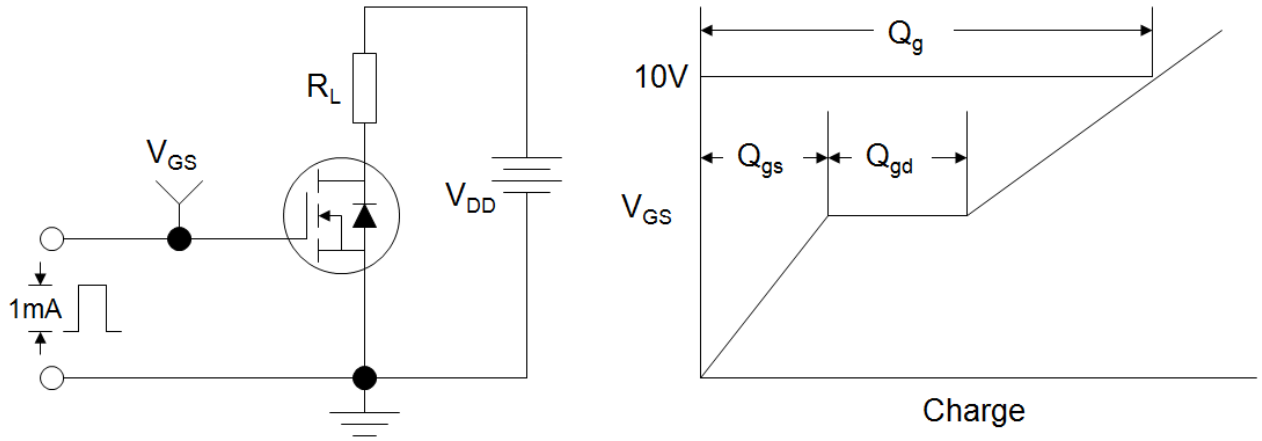

Figure B：Resistive Switching Test Circuit and Waveform

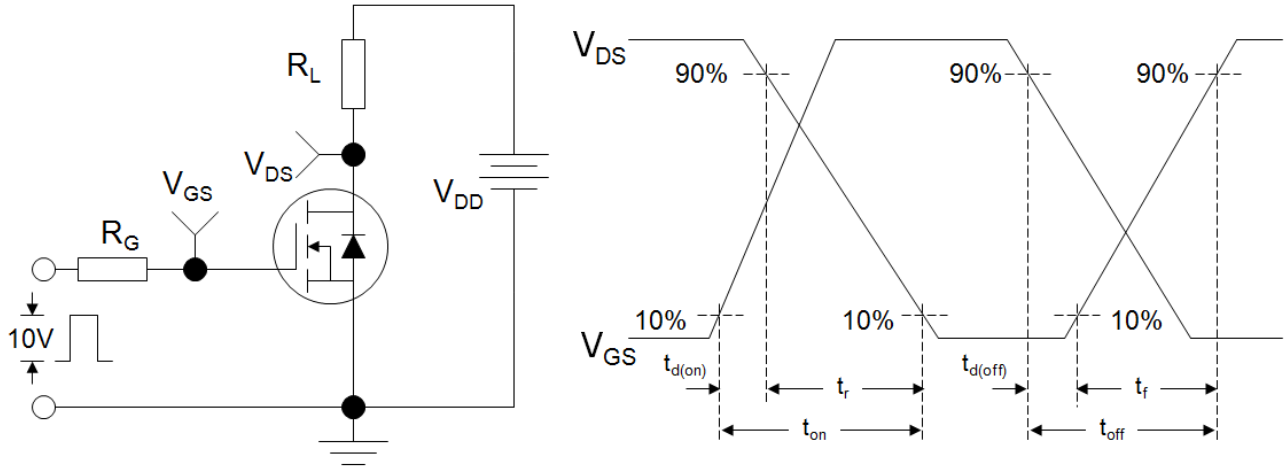

Figure C：Unclamped Inductive Switching Test Circuit and Waveform

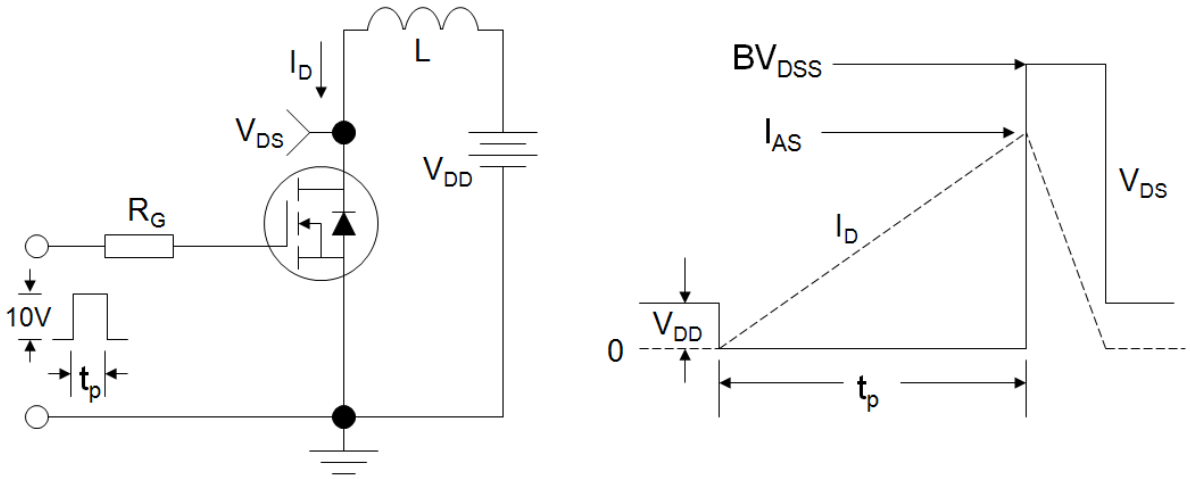

Outline Dimension

Unit: mm

TO-220F

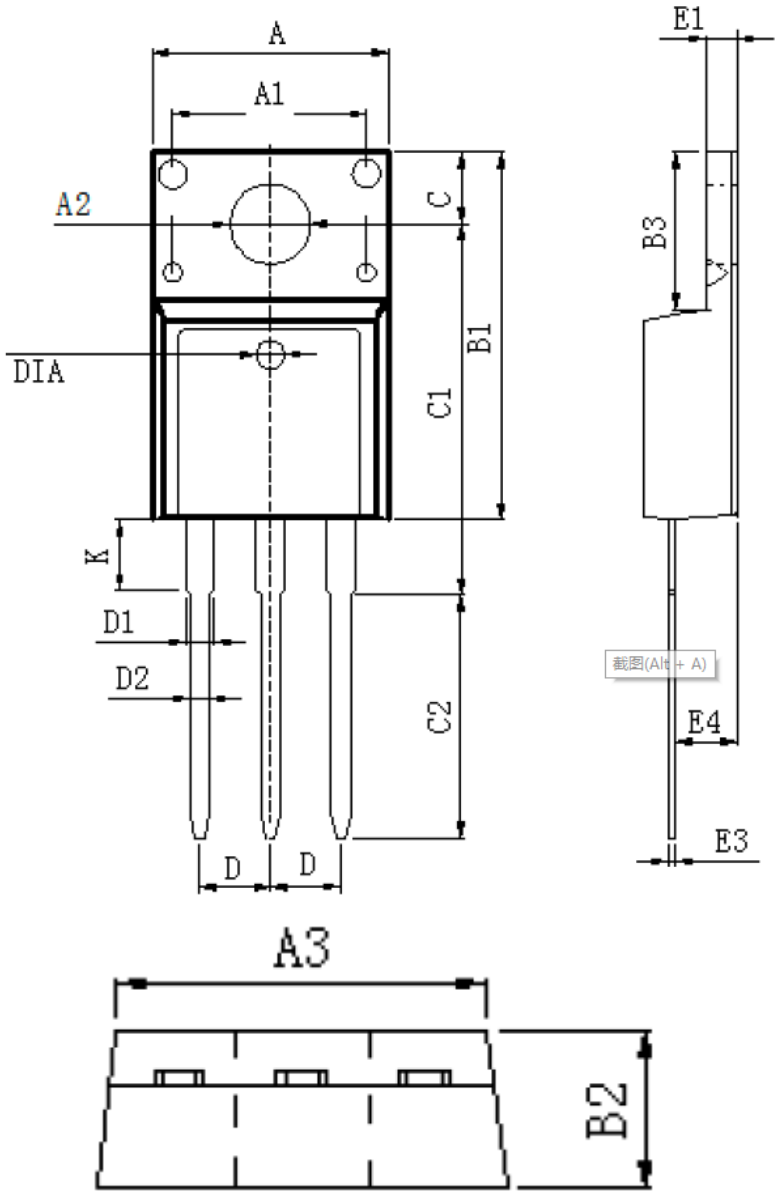

DIM	MILLIMETERS
A	10. 16±0. 3
A1	7. 00±0. 1
A2	3. 3±0. 2
A3	9. 5±0. 2
B1	15. 87±0. 3
B2	4. 7±0. 2
B3	6. 68±0. 4
C	3. 3±0. 2
C1	12. 57±0. 3
C2	10. 02±0. 5
D	2. 54±0. 05
D1	1. 28±0. 2
D2	0. 8±0. 1
K	3. 1±0. 3
E1	2. 54±0. 1
E3	0. 5±0. 1
E4	2. 76±0. 2
DIA	⊙1. 5(deep 0. 2)

Unit :mm

Outline Dimension

Unit: mm

TO-220

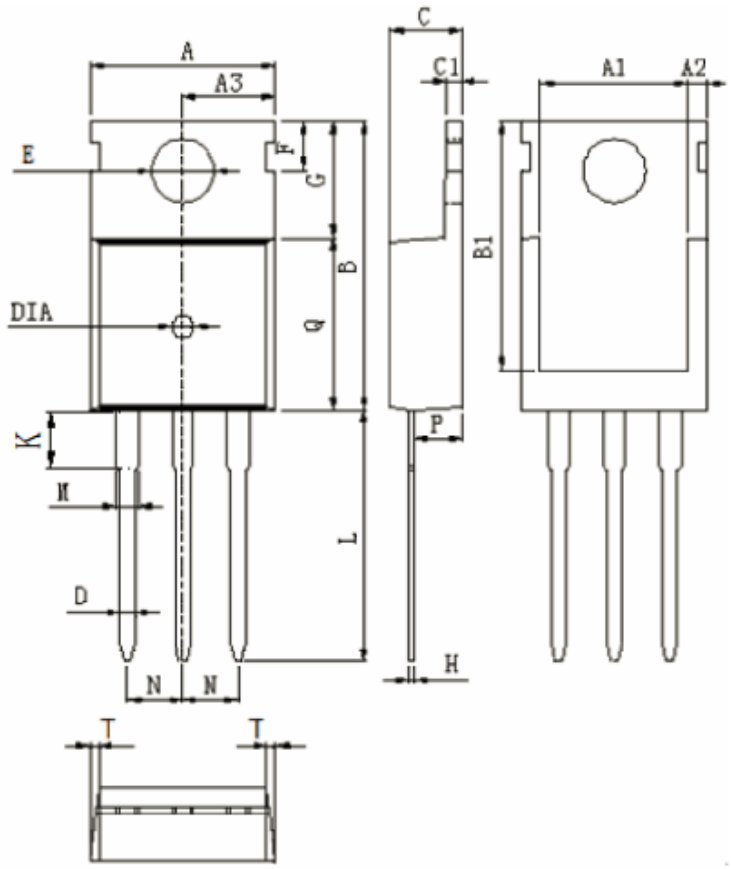

DIM	MILLIMETERS
A	10.0±0.3
A1	8.64±0.2
A2	1.15±0.1
A3	5.0±0.2
B	15.8±0.4
B1	13.2±0.3
C	4.56±0.1
C1	1.3±0.2
D	0.8±0.2
E	3.6±0.2
F	2.95±0.3
G	6.5±0.3
H	0.5±0.1
K	3.1±0.2
L	13.2±0.4
M	1.25±0.1
N	2.54±0.1
P	2.4±0.3
Q	9.0±0.3
T	W:0.35
DIA	⊙1.5(deep 0.2)

Unit :mm

Outline Dimension

Unit: mm

TO-252

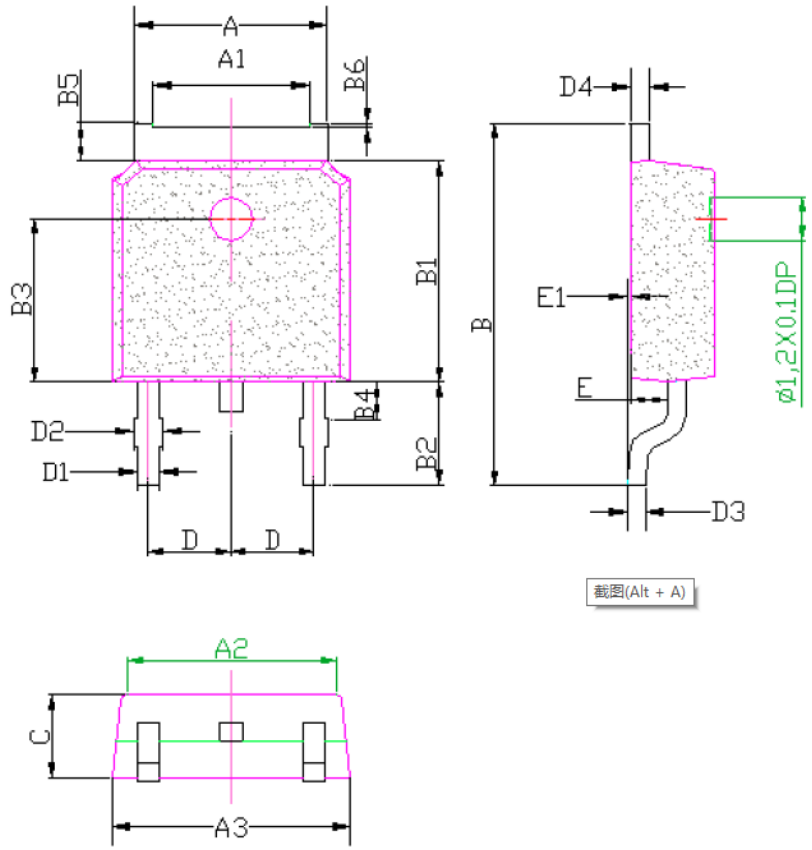

DIM	MILLIMETERS
A	5. 33±0. 2
A1	4. 33±0. 2
A2	5. 80±0. 1
A3	6. 6±0. 2
B	10±0. 5
B1	6. 1±0. 3
B2	2. 85±0. 5
B3	4. 5±0. 15
B4	1. 0±0. 1
B5	1. 05±0. 1
B6	0. 1±0. 05
C	2. 3±0. 15
D	2. 286±0. 05
D1	0. 60±0. 1
D2	0. 72±0. 12
D3	0. 5±0. 08
D4	0. 5±0. 08
E	1. 01±0. 15
E1	0. 1±0. 05
DIA	⊙1. 2(deep 0. 1)

Unit :mm

Outline Dimension

Unit: mm

TO-126

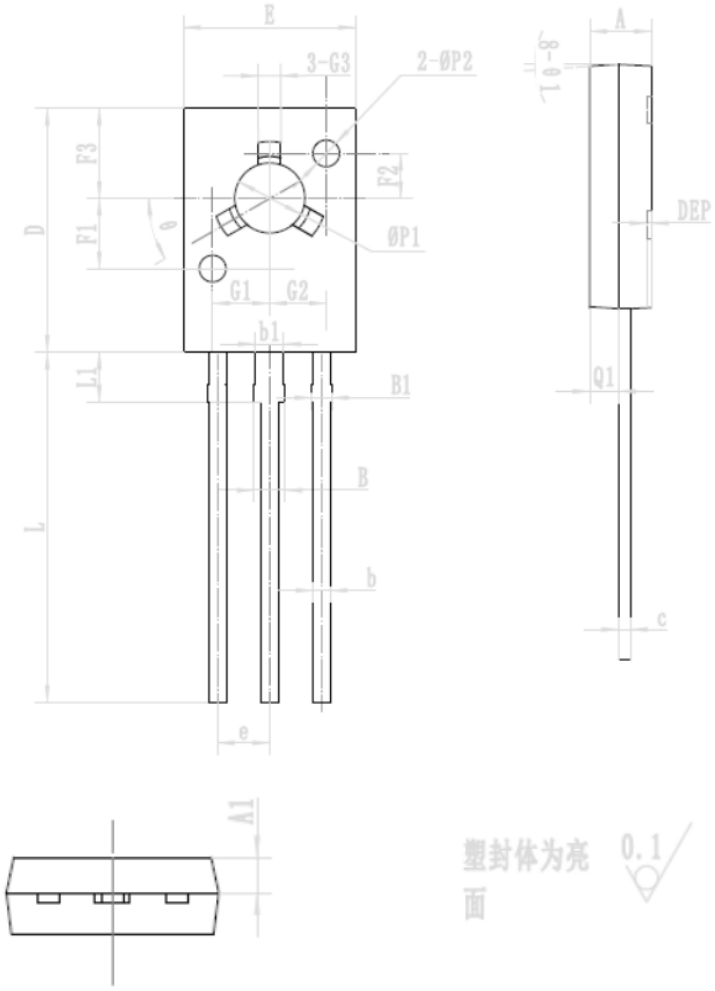

SYMBOL	MM		
	MIN	NOM	MAX
*A	2.60	2.70	2.80
A1	1.22	1.27	1.32
*b	0.71	0.76	0.81
b1	1.22	1.27	1.32
*B	1.27	1.37	1.45
*B1	0.71	0.76	0.88
*c	0.38	0.40	0.45
*D	10.70	10.80	10.90
*E	7.50	7.60	7.70
F1	2.90	3.00	3.10
F2	1.90	2.00	2.10
F3	3.90	4.00	4.10
G1	2.40	2.50	2.60
G2	2.40	2.50	2.60
G3	0.90	1.00	1.10
*e	2.24	2.29	2.34
*L	15.30	15.50	15.70
L1	2.10	2.20	2.30
Q1	1.17	1.27	1.37
θ	27°	30°	33°
θ1	1°	4°	7°
*ΦP1	3.00	3.10	3.20
ΦP2	1.15	1.20	1.25
DEP	0.10	0.15	0.20
带*为检验尺寸			